ENERGY EXCHANGE POINTS BETWEEN UPPCL AND NREB GRID
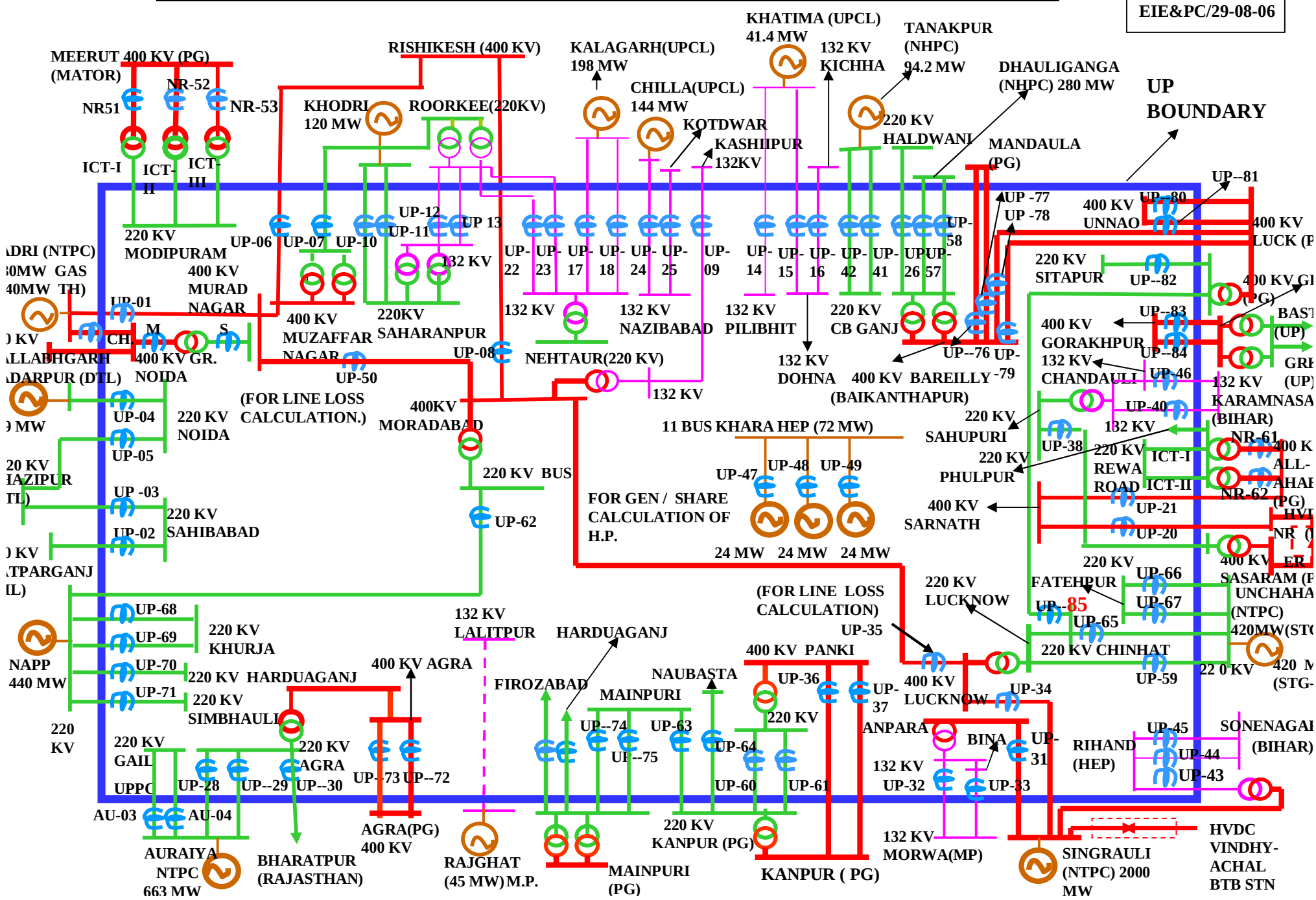
EIE&PC/29-08-06